HYPERFAST RECOVERY RECTIFIERS	REVERSE VOLTAGE 600 Volts FORWARD CURRENT 15 Amperes

FEATURES

- Ultrafast Recovery Time
- Soft Recovery Characteristics
- Low Recovery Loss
- Low Forward Voltage
- High Surge Current Capability
- Low Leakage Current

MECHANICAL DATA

- Case: TO-220, TO-220F
- Polarity: As Marked

UF15G06CT UF15G06FCT

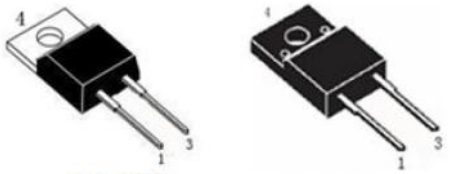

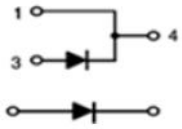

1、CATHODE

3、ANODE

MAXIMUM RATINGS AND ELECTRICAL CHARACTERISTICS
Ratings at 25°C ambient temperature unless otherwise specified.
Single phase, half wave, 60Hz, resistive or inductive load.
For capacitive load, derate current by 20%

Characteristics	Symbol	UF15G06CT-UF15G06FCT		Unit
Repetitive Reverse Voltage	V_{RRM}	600		V
D.C Reverse Voltage	V_R	600		V
Forward Voltage	V_F	Typ.	Max.	V
I_F=15A T_J=25°C		1.4	1.7	
I_F=15A T_J=125°C		1.2		
Reverse Leakage Current VR=600V, T_J=25°C	I_{RM}		25	μA
T_J=125°C			250	
Average Forward Current Tc=90°C, Duty=0.5 (Per	I_F		15	A
Peak Repetitive Forward Current Tc=110 ° C,	I_{FM}		25	A
Non-Repetitive Surge Forward Current T_J=45°C 8.3 ms Single Half Sine-wave	I_{FSM}		110	A
Reverse Recovery Time (I_F=1A, V_R=30V, diF/dt=-200A/μs)	Trr	30		nS
(I_F=15A, V_R=400V, diF/dt=-200A/μs)T_J=25°C		40		
(I_F=15A, V_R=400V, diF/dt=-200A/μs)T_J=125°C		80		
Reverse Recovery Charge (I_F=15A, V_R=400V, diF/dt=-200A/μs)T_J=125°C	Qrr	120		nC
Max. Reverse Recovery Current (I_F=15A, V_R=400V, diF/dt=-200A/μs)T_J=125°C	I_{RRM}	3		A
Junction and StorageTemperature Range	T_J, T_{STG}	-55 to +175		°C

Rating and Characteristic Curves

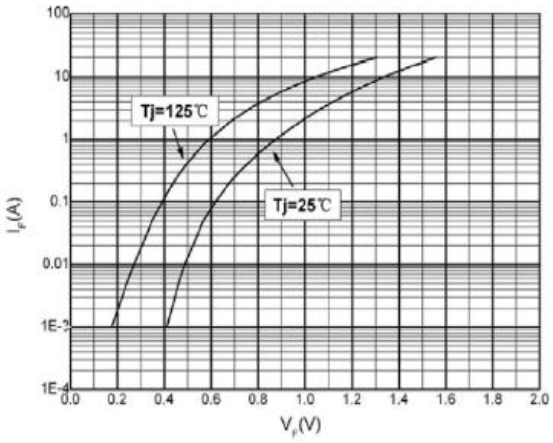

Typical Forward Voltage

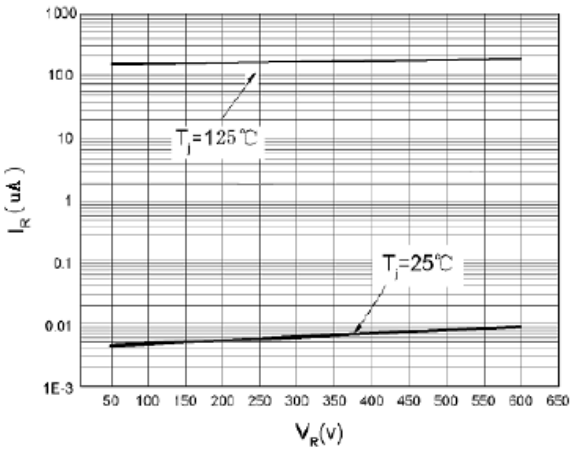

Typical Reverse Current

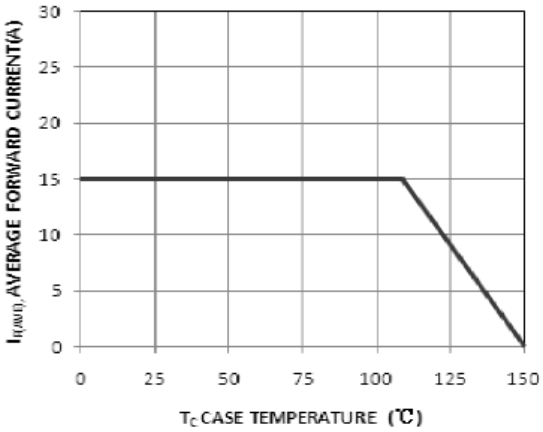

Average Forward Forward Current vs.

Case Temperature

TO-220 MECHANICAL DATA

UNIT: mm

SYMBOL	MIN	NOM	MAX	SYMBOL	MIN	NOM	MAX
A	4		4.8	e		2.54	
B	1.2		1.4	e1	1		1.5
B1	1		1.4	F	1.1		1.4
b1	0.65		1	L	12.5		14.5
c	0.4		0.55	L1	3	3.5	4
D	15		16.5	ΦP		3.8	
D1	5.9		6.9	Q	2.5		3
E	9.9		10.7	Q1	2		2.9

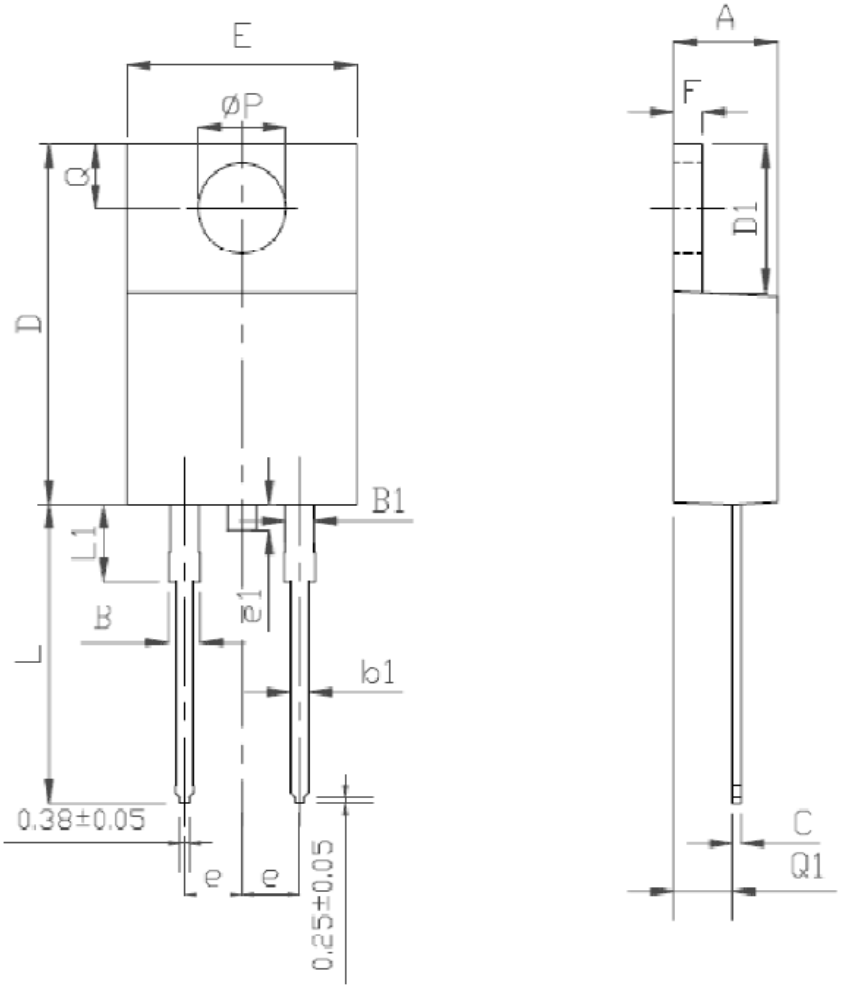

TO-220F MECHANICAL DATA

UNIT: mm
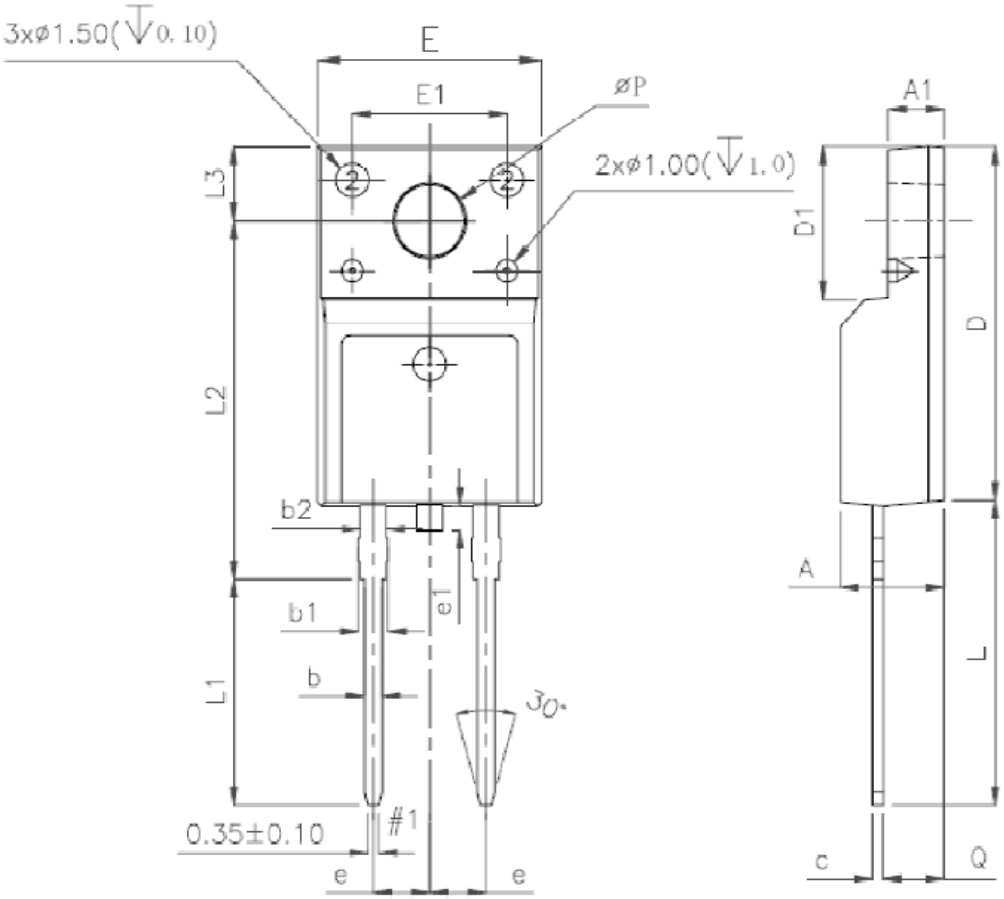
SYMBOL	MIN	NOM	MAX	SYMBOL	MIN	NOM	MAX
A	4.5		4.9	E1		7	
A1	2.3		2.9	e		2.54	
b	0.45		0.9	e1	1		1.5
b1	1.1		1.7	L	12.5		14.3
b2	1.2		1.4	L1	9.45		10.05
c	0.35		0.9	L2	15		16
D	14.5		17	L3	3.2		4.4
D1	6.1		6.9	ΦP	3		3.3
E	9.6		10.3	Q	2.5		2.9