LOW VF SCHOTTKY RECTIFIERS	REVERSE VOLTAGE 300 Volts FORWARD CURRENT 10 Amperes

FEATURES

- Guard Ring Die Construction for Transient Protection
- Low Power Loss,High Effciency
- High Surge Capability
- High Current Capability and Low Forward Voltage Drop
- Schottky Barrier Chip

MECHANICAL DATA

- Case: TO-220, TO-220F
- Polarity: As Marked

S10U300CT **S10U300FCT**

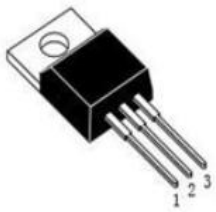

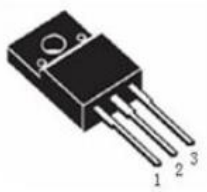

TO-220 TO-220F

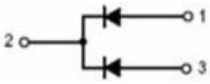

1、ANODE
2、CATHODE
3、ANODE

MAXIMUM RATINGS AND ELECTRICAL CHARACTERISTICS
Ratings at 25°C ambient temperature unless otherwise specified.
Single phase, half wave, 60Hz, resistive or inductive load.
For capacitive load, derate current by 20%

Characteristics		Symbol	S10U300CT	S10U300FCT	Unit
Peak Repetitive Reverse Voltage		V_{RRM}	300		V
Working Peak Reverse Voltage		V_{RWM}			V
DC Blocking Voltage		V_R			V
Maximum Instaneous Forward Voltage I_F=3A T_C=25°C I_F=3A T_C=125°C I_F=5A T_C=25°C I_F=5A T_C=125°C		V_F	Typ. 0.8 0.7 0.85 0.77		V
Peak Reverse Current at Rated DC Blocking Voltage	T_C=25°C T_C=125°C	I_R	0.05 15		mA
Average Output Rectifie Current (per leg) (total device)		I_F	5 10		A
Non-Repetitive Peak Surge Current Surge applied at rated load conditions halfwave,single phase,60H_Z		I_{FSM}	200		A
Maximum Thermal Resistance	TO-220 TO-220F	$R_{\theta Jc}$	2 4		°C/W
	TO-220 TO-220F	$R_{\theta Ja}$	60		
Junction and StorageTemperature Range		T_J, T_{STG}	-65 to +150		°C

Rating and Characteristic Curves

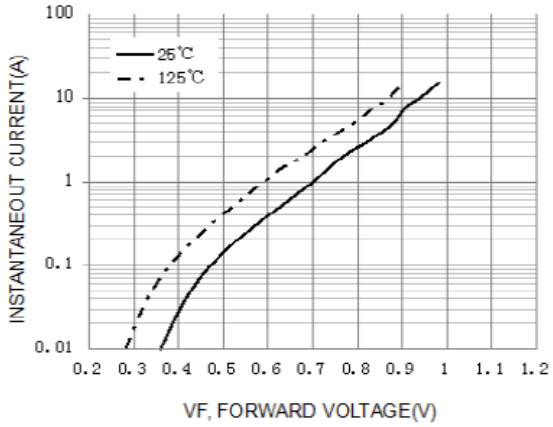

Typical Forward Voltage Per Diode

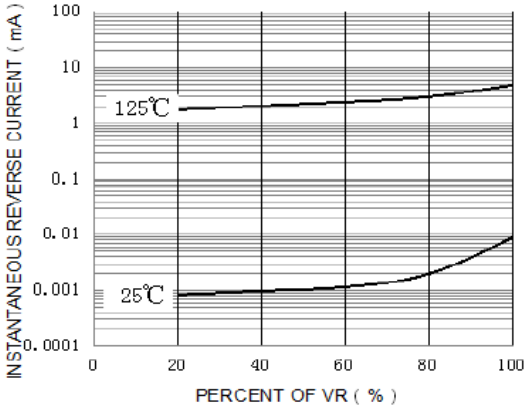

Typical Reverse Current Per Diode

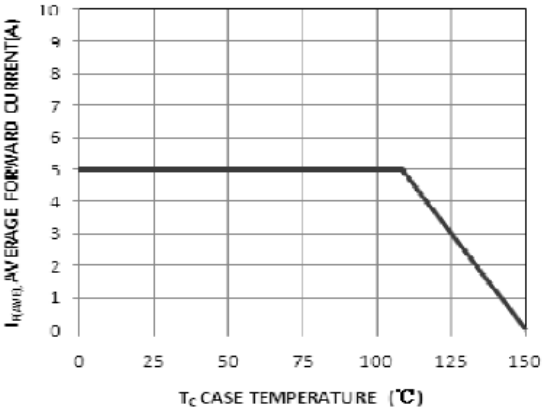

Average Forward Forward Current vs.

Case Temperature Per Diode

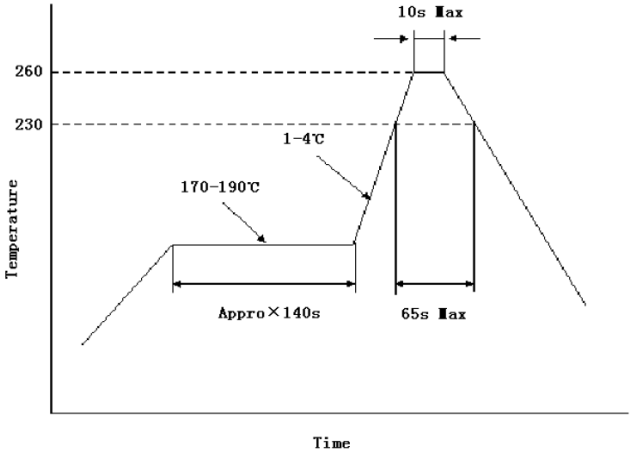

Reflow Soldering Temperature Profile

TO-220 MECHANICAL DATA

UNIT: mm

SYMBOL	MIN	NOM	MAX	SYMBOL	MIN	NOM	MAX
A	4		4.8	e	2.44	2.54	2.64
B	1.2		1.4	F	1.1		1.4
B1	1		1.4	L	12.5		14.5
b1	0.75		0.95	L1	3	3.5	4
c	0.4		0.55	ΦP	3.7	3.8	3.9
D	15		16.5	Q	2.5		3
D1	5.9		6.9	Q1	2		2.9
E	9.9		10.7				

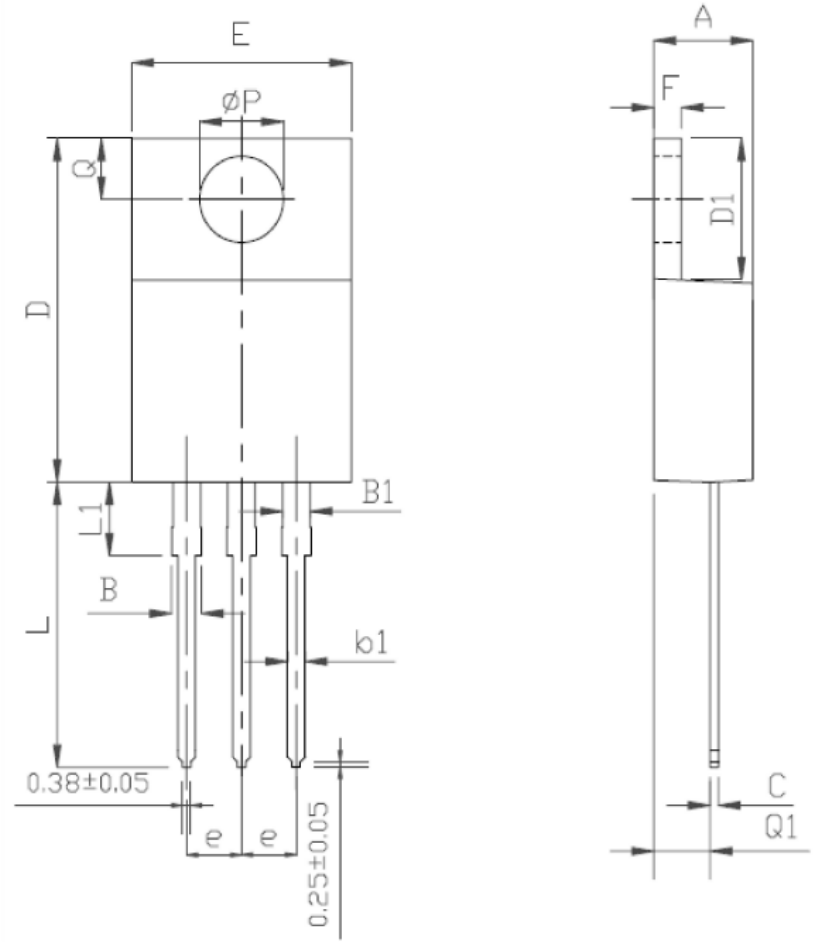

TO-220F MECHANICAL DATA

UNIT: mm
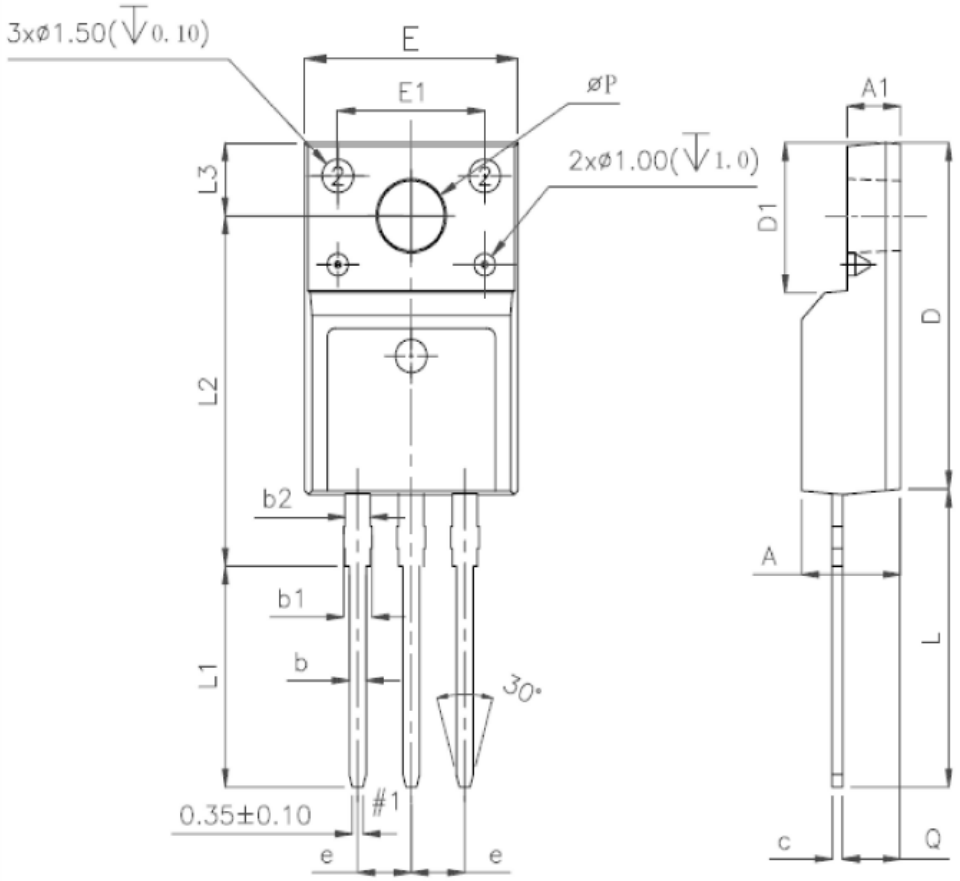
SYMBOL	MIN	NOM	MAX	SYMBOL	MIN	NOM	MAX
A	4.5		4.9	E1	6.5	7	7.5
A1	2.3		2.9	e	2.44	2.54	2.64
b	0.65		0.9	L	12.5		14.3
b1	1.1		1.7	L1	9.45		10.05
b2	1.2		1.4	L2	15		16
c	0.35		0.65	L3	3.2		4.4
D	14.5		16.5	ΦP	3		3.3
D1	6.1		6.9	Q	2.5		2.9
E	9.6		10.3