沛倫股份有限公司
Compact Technology Corp.

4GBJ406U

LOW VF GLASS PASSIVATED BRIDGE RECTIFIERS	REVERSE VOLTAGE 600 Volts FORWARD CURRENT 4 Amperes

FEATURES

- Glass passivated chip
- Ideal for printed circuit board
- Low forward voltage drop
- High surge current capability

MECHANICAL DATA

- Polarity: As marked on Body
- Mounting position: Any

4GBJ

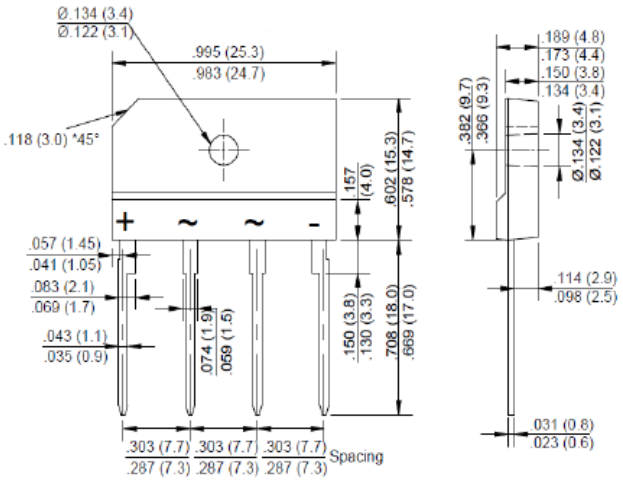

Dimensions in inches and (millimeters)

MAXIMUM RATINGS AND ELECTRICAL CHARACTERISTICS
Ratings at 25°C ambient temperature unless otherwise specified.
Single phase, half wave, 60Hz, resistive or inductive load.
For capacitive load, derate current by 20%

Characteristics	Symbol	4GBJ406U	Unit
Maximum Repetitive Peak Reverse Voltage	V_{RRM}	600	V
Maximum RMS Reverse Voltage	V_{RMS}	420	V
Maximum DC Blocking Voltage	V_{DC}	600	V
Maximum Average Forward (with heatsink Note2) Rectified Current @T_C=100˚C (without heatsink)	$I_{(AV)}$	4 2.4	A
Peak Forward Surge Current, 8.3 ms Single Half Sine-wave Superimposed on Rated Load (JEDEC method)	I_{FSM}	135	A
Peak Forward Voltage per Diode at 4A DC	V_F	0.90	V
Maximum DC Reverse Current @T_J=25°C at Rated DC Blocking Voltage @T_J=125°C	I_R	5 120	μA
I^2t Rating for Fusing (t<8.3ms)	I^2t	76	A^2s
Typical Junction Capacitance Per Diode (Note1)	C_J	45	pF
Typical Thermal Resistance (Note2)	$R_{\theta JC}$	2.2	˚C/W
Junction and StorageTemperature Range	T_J, T_{STG}	-55 to +150	°C

NOTES: 1.Measured at 1.0MHz and applied reverse voltage of 4.0V DC.
2.Device mounted on 50mm*50mm*1.6mm Cu plate heatsink.

Rating and Characteristic Curves

Fig. 1 - Forward Current Derating Curve

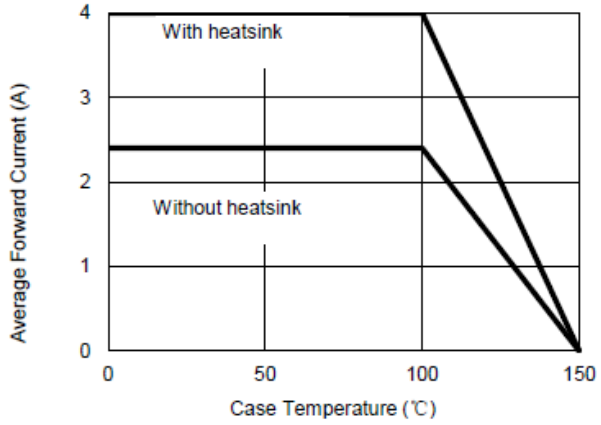

Fig. 2 - Maximum Non-Repetitive Surge Current

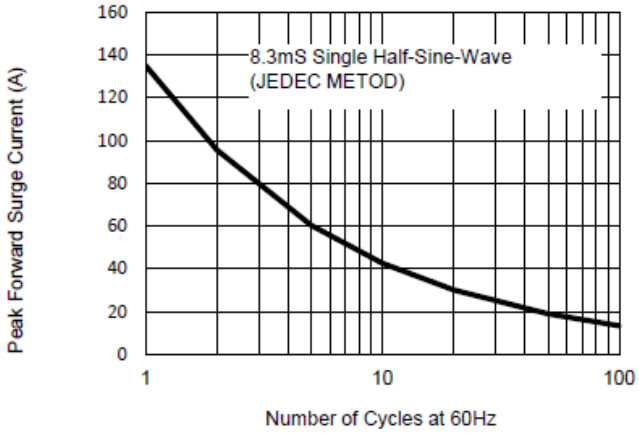

Fig. 3 - Typical Reverse Characteristics

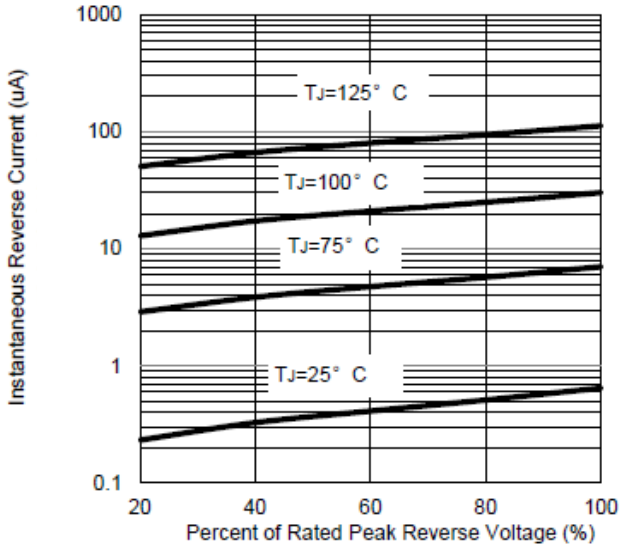

Fig. 4 - Typical Forward Characteristics

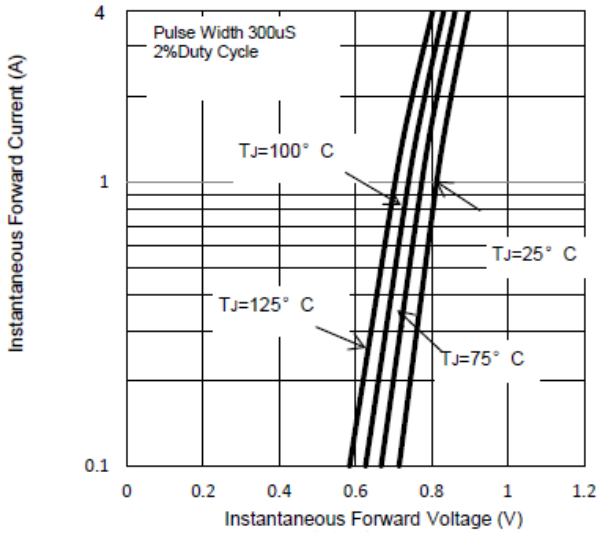
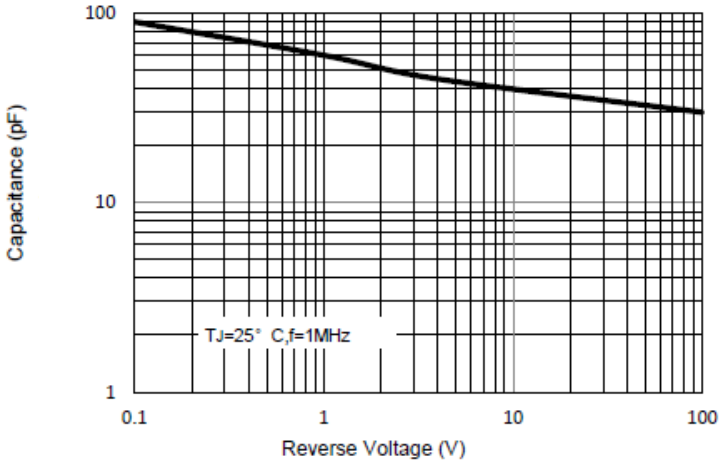
Fig. 5 - Typical Junction Capacitance