HYPERFAST RECOVERY RECTIFIERS	REVERSE VOLTAGE 1200 Volts FORWARD CURRENT 30 Amperes

FEATURES

- Low forward voltage drop
- Excellent high temperature stability
- Fast switching capability
- Low reverse current
- High Current Capability and Low Forward Voltage Drop

MECHANICAL DATA

- Case: TO-247AC
- Polarity: Cathode Band

TO-247AC

1、ANODE
2、CATHODE

MAXIMUM RATINGS AND ELECTRICAL CHARACTERISTICS
Ratings at 25˚C ambient temperature unless otherwise specified.
Single phase, half wave, 60Hz, resistive or inductive load.
For capacitive load, derate current by 20%

Characteristics		Symbol	UF30S12PTS		Unit
Maximum Repetitive Peak Reverse Voltage		V_{RRM}	1200		V
Maximum DC blocking voltage		V_{DC}	1200		V
Average Forward Rectified Current Tc=105°C, Duty=0.5 (per leg)		$I_{F(AV)}$	30		A
Peak Repetitive Forward Current Tc=105°C, Duty=0.5		I_{FM}	42		A
Peak Forward Surge Current, 8.3 ms Single Half Sine-wave Superimposed on Rated Load		I_{FSM}	300		A
			Typ.	Max.	
Maximum DC Reverse Current at Rated DC Blocking Voltage	T_J=25°C T_J=150°C	I_R		10 500	μA
Maximum Instantaneous Forward Voltage at 30A	T_J=25°C T_J=150°C	V_F	2.9 2.25	3.5	V
Reverse Recovery Time (IF=1A,VR=30V,diF/dt=-200A/μs)		Trr	26	35	nS
Reverse Recovery Time (IF=30A,VR=600V,diF/dt=-200A/μs) TJ=150°C		Trr	475		nS
Reverse Recovery Charge (IF=30A,VR=600V,diF/dt=-200A/μs) TJ=150°C		Qrr	2910		nC
Max. Reverse Recovery Current (IF=30A,VR=600V,diF/dt=-200A/μs) TJ=150°C		I_{RRM}	11.5		A
Power Dissipation		P_D	188		W
Typical Thermal Resistance Junction to Case		$R_{\theta JC}$	0.8		°C/W
Junction Temperature Range		T_J	-55 to +175		°C
Storage Temperature Range		T_{STG}	-55 to +150		°C

<APPLICATIONS>:
- Freewheeling, Snubber, Clamp
- Inversion Welder
- PFC
- Plating Power Supply
- Ultrasonic Cleaner and Welder
- Converter & Chopper
- UPS

Rating and Characteristic Curves

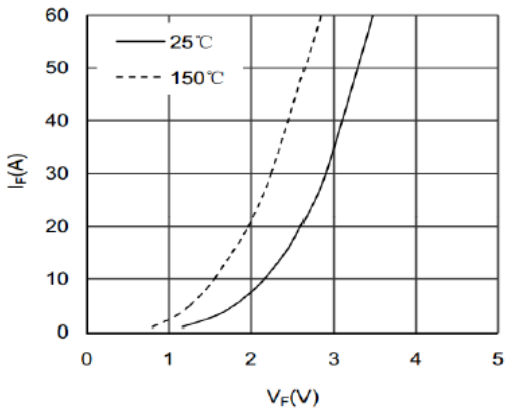

Forward Voltage Drop vs Forward Current

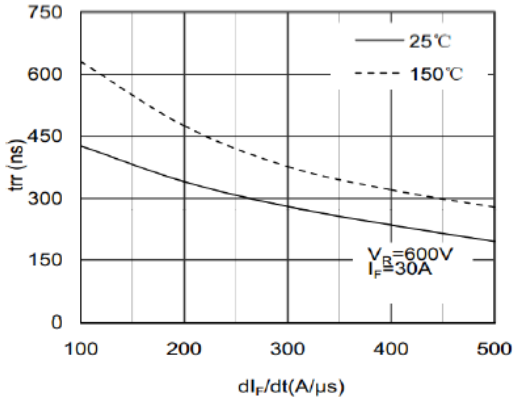

Reverse Recovery Time vs dIF/dt

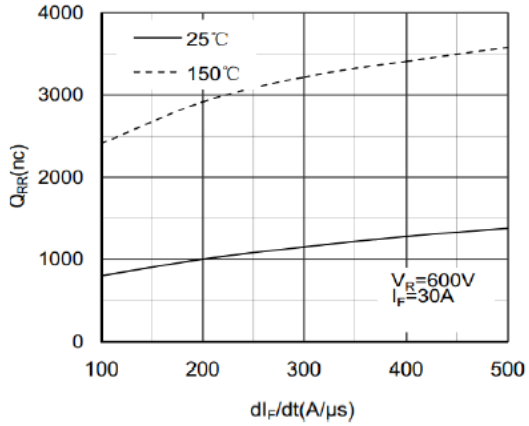

Reverse Recovery Charge vs dIF/dt

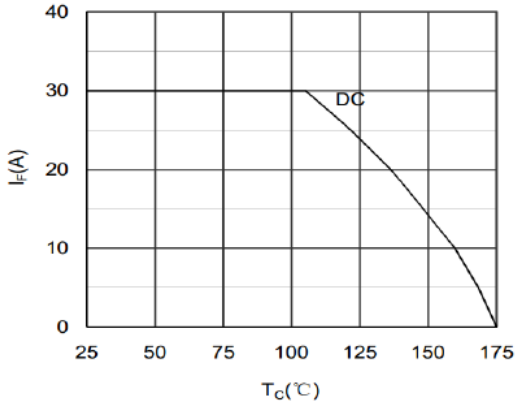

Forward current vs Case temperature

TO-247AC MECHANICAL DATA

UNIT: mm
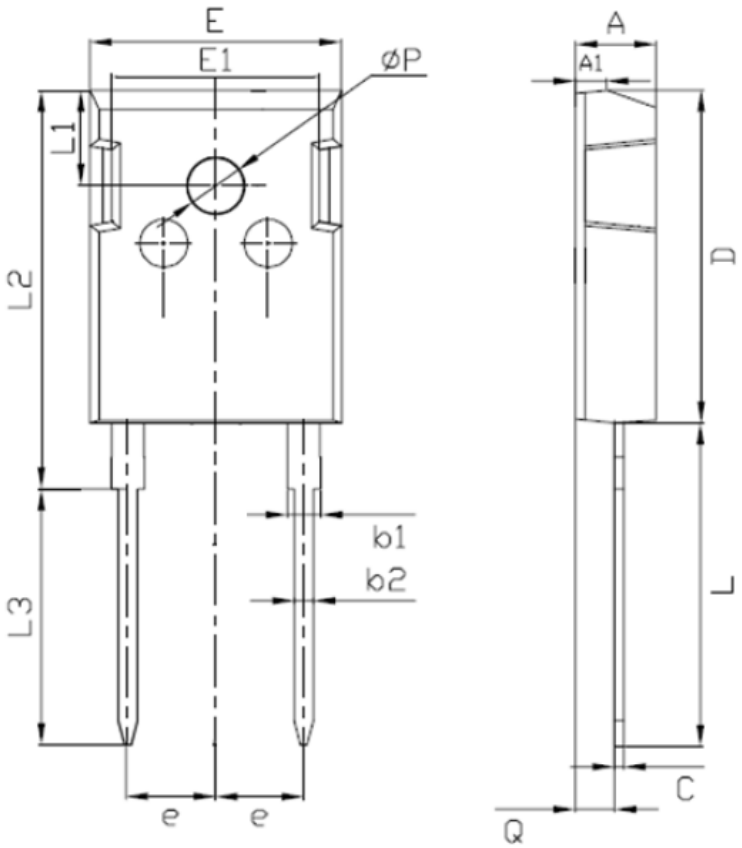
SYMBOL	MIN	NOM	MAX	SYMBOL	MIN	NOM	MAX
A	4. 60		5. 15	b1	1. 86		2. 26
b2		1. 20		C		0. 50	
D	19. 00		21. 00	E	15. 45		15. 75
E1	12. 00		13. 06	e		5. 45	
L	14. 00		14. 60	L1	5. 20		5. 88
L2	24. 00		24. 40	L3	10. 00		10. 60
P		3. 50		Q	2. 30		2. 70
A1	1. 30		1. 60