沛倫股份有限公司
Compact Technology Corp.

GBJ2506L

GLASS PASSIVATED BRIDGE RECTIFIERS	REVERSE VOLTAGE 600 Volts FORWARD CURRENT 25 Amperes

FEATURES

- Rating to 600V PRV
- Ideal for printed circuit board
- Low forward voltage drop,high current capability
- Reliable low cost construction utilizing molded plastic technique results in inexpensive product
- The plastic material has UL flammability classification 94V-0

MECHANICAL DATA

- Polarity: As marked on Body
- Mounting position: Any

GBJ

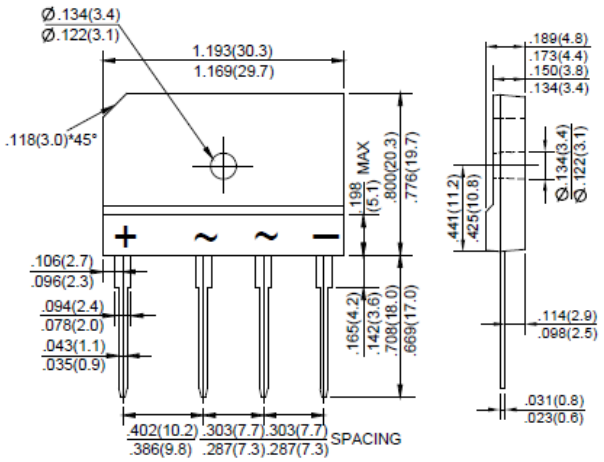

Dimensions in inches and (millimeters)

MAXIMUM RATINGS AND ELECTRICAL CHARACTERISTICS
Ratings at 25°C ambient temperature unless otherwise specified.
Single phase, half wave, 60Hz, resistive or inductive load.
For capacitive load, derate current by 20%

Characteristics	Symbol	GBJ2506L	Unit
Maximum Repetitive Peak Reverse Voltage	V_{RRM}	600	V
Maximum RMS Reverse Voltage	V_{RMS}	420	V
Maximum DC Blocking Voltage	V_{DC}	600	V
Maximum Average Forward (with heatsink Note2)	$I_{(AV)}$	25	A
Rectified Current @TC=100˚C (without heatsink)		4.2	
Peak Forward Surge Current, 8.3 ms Single Half Sine-wave Superimposed on Rated Load (JEDEC method)	I_{FSM}	350	A
Maximum Forward Voltage at 12.5A DC	V_F	0.92	V
Maximum DC Reverse Current @T_J=25°C	I_R	10	μA
at Rated DC Blocking Voltage @T_J=125°C		127	
I^2t Rating for Fusing (t<8.3ms)	I^2t	508	A^2s
Typical Junction Capacitance Per Element (Note1)	C_J	85	pF
Typical Thermal Resistance	$R_{\theta JC}$	0.6	˚C/W
Junction and StorageTemperature Range	T_J, T_{STG}	-55 to +150	°C

NOTES: 1.Measured at 1.0MHz and applied reverse voltage of 4.0V DC.
2.Device mounted on 300mm*300mm*1.6mm cu plate heatsink.

Rating and Characteristic Curves

FIG.1-FORWARD CURRENT DERATING CURVE

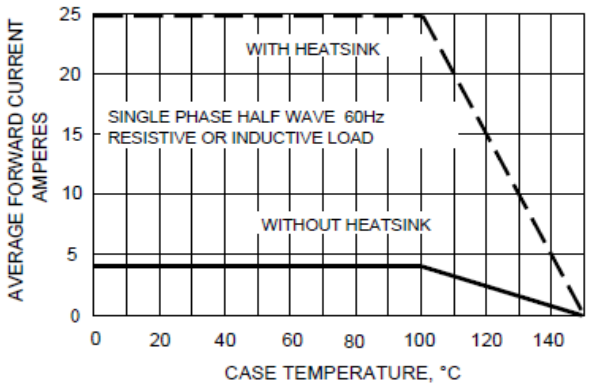

FIG.2-MAXMUN NON-REPETITIVE SURGE CURRENT

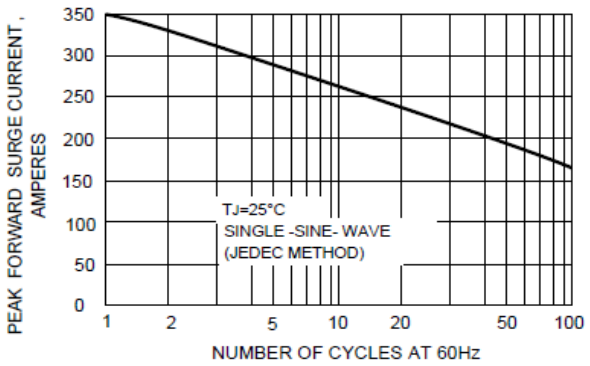

FIG.3-TYPICAL JUNCTION CAPACITANCE

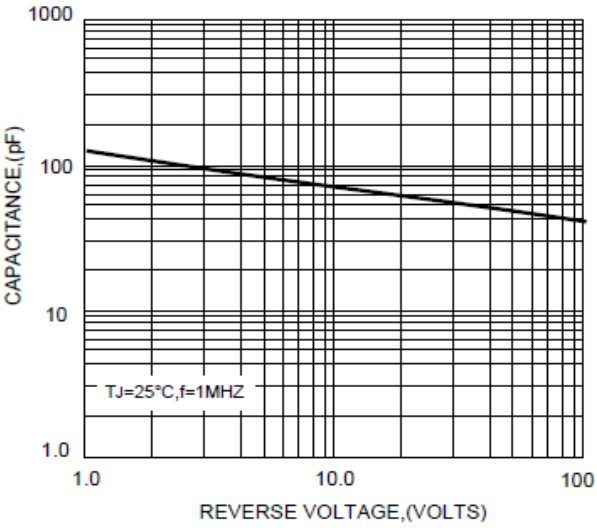

FIG.4-TYPICAL FORWARD CHARACTERISTICS

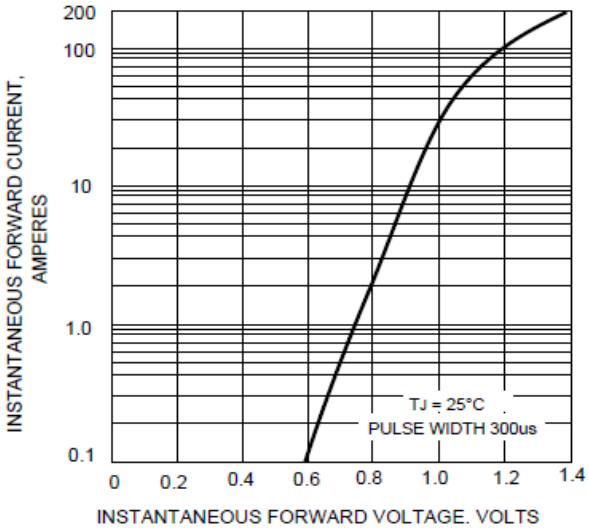
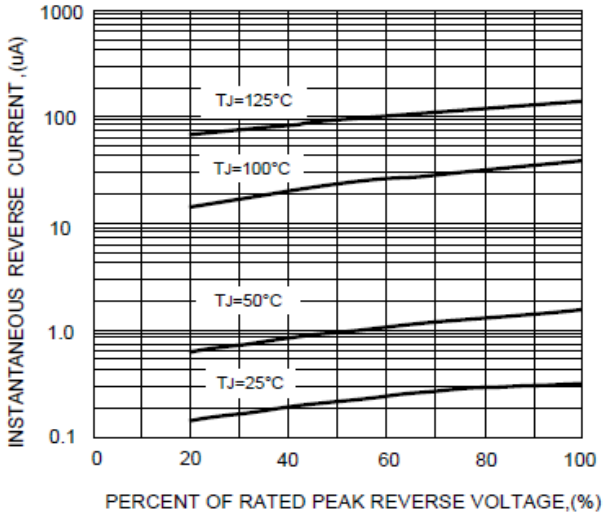
FIG.5-TYPICAL REVERSE CHARACTERISTICS